CWTF15-1, PF (1 Lower Warmer)

Height: 17.3" (43.9cm) Width: 8.4" (21.3cm) Depth: 21.4" (54.4cm)

- Model is space-saving 8.5" (21.6cm) wide
- All stainless steel construction
- Hot water faucet (requires active plumbing connection)
- Pourover feature
- SplashGard® funnel deflects hot liquids away from the hand
- PROP 65 Warning Decal included in packaging with equipment
- Servers not included unless otherwise noted

Server(s) sold separately

Agency:

NSF UL LISTED

Specifications

Product #: 12950.0293

Water Access: Plumbed

Finish: Stainless

Funnel: Black Plastic

Faucet: Upper

Warmers: One Lower

Additional Features

Low Profile

Pourover Option

Electrical & Capacity

Volts*	Amps	Watts	Cord Attached	Plug Type	8oz cups/hr 236ml cups/hr	Input H²O Temp.	Phase	# Wires plus Ground	Hertz
120	12.3	1470	Yes	NEMA 5-15P	61	60°F (15.5°C)	1	2	60

*When a BUNN is machine rated 120/208-240V, 120/208V or 120/240V, the higher voltage is the supply voltage needed to power the machine. The 120V is there to supply power to some components rated 120V in the machine, but it is not the supply voltage and would not power the machine if the machine is marked with the before mentioned ratings.

Plumbing Requirements

PSI	kPa	Fitting Supplied	Water Flow Required (GPM)
20-90	138-621	1/4" Male Flare Fitting	-

CAD Drawings

2D	Revit	KLC
●		

WARNING: This product can expose you to chemicals including Bisphenol A (BPA), which is known to the State of California to cause birth defects or other reproductive harm. For more information go to www.P65Warnings.ca.gov

BUNN® reserves the right to change specifications and product design without notice. Such revisions do not entitle the buyer to corresponding changes, improvements, additions or replacements for previously purchased equipment. For most current specifications and other info visit bunn.com.

Last Updated: 08/11/2023

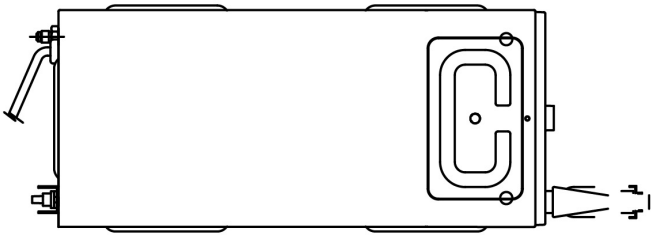

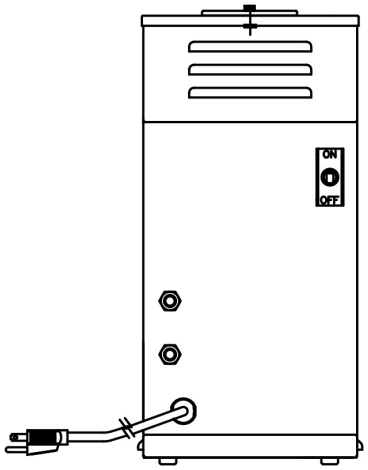

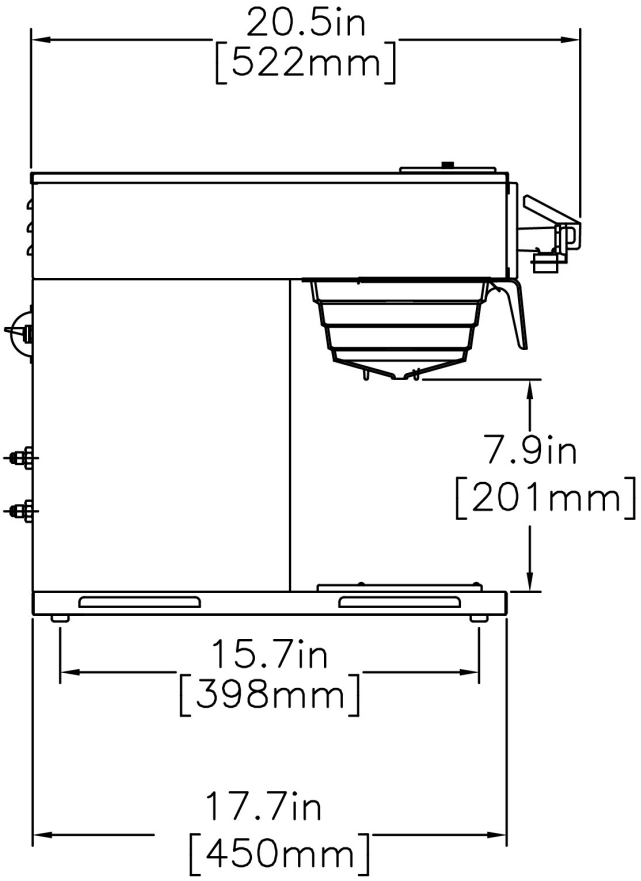

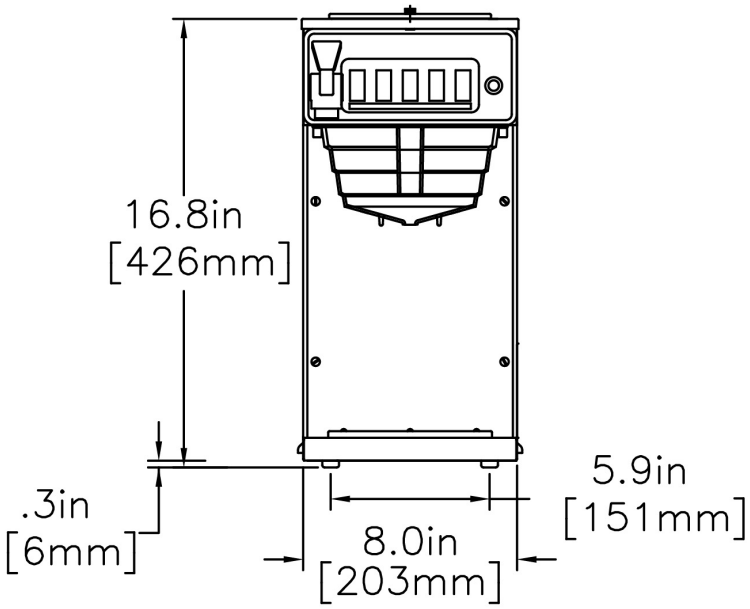

	Unit			Shipping				
	Height	**Width**	**Depth**	**Height**	**Width**	**Depth**	**Weight**	**Volume**
English	17.3 in.	8.4 in.	21.4 in.	23.8 in.	12.5 in.	26.5 in.	33.450 lbs	4.566 ft³
Metric	43.9 cm	21.3 cm	54.4 cm	60.3 cm	31.8 cm	67.4 cm	15.173 kgs	0.129 m³

BUNN® reserves the right to change specifications and product design without notice. Such revisions do not entitle the buyer to corresponding changes, improvements, additions or replacements for previously purchased equipment. For most current specifications and other info visit bunn.com.

Last Updated: 08/11/2023

Related Products & Accessories: CWTF15-1, PF (1 Lower Warmer)(12950.0293)

FUNNEL W/DECAL,PPK NAR BLK(SM)

Product #: 02774.0011

FUNNEL W/DECAL,PPK NAR BLK(LG)

Product #: 04274.0012

FILTERS,REGULAR1M 500/2 50/CL

Product #: 20115.0000

FUNNEL ASSY, SST-BLK HDL(7.12

Product #: 20216.0000

FUNNEL W/DECALS, BLACK PLASTIC

Product #: 20583.0003

FUNNEL ASSY, SST-PP BLK HNDL

Product #: 29151.0000

FUNNEL ASSY,SST-PP ORANGE HDL

Product #: 29151.0001

WATER FILTER SYSTEM,EQ-17-TL

Product #: 30200.1000

WATER FILTER,IN LINE ED-17-TL

Product #: 30201.1001

SYSTEM, WEQ-10(1.5)5L

Product #: 56000.0024

CARTRIDGE, WEQ-10 (1.5)5L

Product #: 56000.0121

CARTRIDGE, WEQ-10.3 (1.67)5L

Product #: 56000.0137

BUNN® reserves the right to change specifications and product design without notice. Such revisions do not entitle the buyer to corresponding changes, improvements, additions or replacements for previously purchased equipment. For most current specifications and other info visit bunn.com.

Serving & Holding Options: CWTF15-1, PF (1 Lower Warmer)(12950.0293)

EASY POUR®,(BLK) 1/CS

Product #:06100.0101

EASY POUR®,(BLK) 2/CS

Product #:06100.0102

EASY POUR®,(BLK) 3/CS

Product #:06100.0103

EASY POUR®,(BLK) 24/CS

Product #:06100.0124

EASY POUR®,(ORN) 1/CS

Product #:06101.0101

EASY POUR®,(ORN) 2/CS

Product #:06101.0102

EASY POUR®,(ORN) 3/CS

Product #:06101.0103

EASY POUR®,(ORN) 24/CS

Product #:06101.0124

DECANTER,GLASS-BLK 12C 24/CS

Product #:42400.0024

DECANTER,GLASS-BLK 12CUP 1PK

Product #:42400.0101

DECANTER,GLASS-BLK 12C 3/CS

Product #:42400.0103

DECANTER,GLASS-ORN 12C 24/CS

Product #:42401.0024

DECANTER, GLASS-ORN 12 CUP 1PK

Product #:42401.0101

DECANTER,GLASS-ORN 12C 3/CS

Product #:42401.0103

BUNN® reserves the right to change specifications and product design without notice. Such revisions do not entitle the buyer to corresponding changes, improvements, additions or replacements for previously purchased equipment. For most current specifications and other info visit bunn.com.